19-0224; Rev 2; 8/94

Evaluation Kit Manual Follows Data Sheet

5V-to-3.3V, Synchronous, Step-Down Power-Supply Controller

MAX767

General Description

The MAX767 is a high-efficiency, synchronous buck controller IC dedicated to converting a fixed 5V supply into a tightly regulated 3.3V output. Two key features set this device apart from similar, low-voltage step-down switching regulators: high operating frequency and all N-channel construction in the application circuit. The 300kHz operating frequency results in very small, low-cost external surface-mount components.

The inductor, at 3.3µH for 5A, is physically at least five times smaller than inductors found in competing solutions. All N-channel construction and synchronous rectification result in reduced cost and highest efficiency. Efficiency exceeds 90% over a wide range of loading, eliminating the need for heatsinking. Output capacitance requirements are low, reducing board space and cost.

The MAX767 is a monolithic BiCMOS IC available in 20-pin SSOP packages. For other fixed output voltages and package options, please consult the factory.

Applications

Local 5V-to-3.3V DC-DC Conversion

Microprocessor Daughterboards

Power Supplies up to 10A or More

Typical Application Circuit

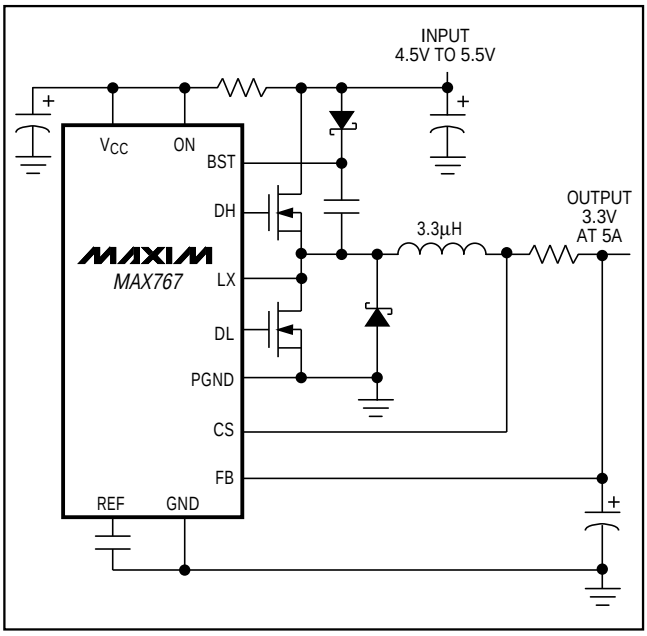

Features

- **>90% Efficiency**
- **700µA Quiescent Supply Current**
- **120µA Standby Supply Current**
- **4.5V-to-5.5V Input Range**
- **Low-Cost Application Circuit**
- **All N-Channel Switches**
- **Small External Components**
- **Tiny Shrink-Small-Outline Package (SSOP)**
- **Predesigned Applications:**
  Standard 5V to 3.3V DC-DC Converters up to 10A
  High-Accuracy Pentium P54C VR-Spec Supply
- **Fixed Output Voltages Available:**
  3.3V (Standard)
  3.45V (High-Speed Pentium™)
  3.6V (PowerPC™)

Ordering Information

PART	TEMP. RANGE	PIN-PACKAGE	REF. TOL.	V_{OUT}
MAX767CAP	0°C to +70°C	20 SSOP	±1.8%	3.3V
MAX767RCAP	0°C to +70°C	20 SSOP	±1.8%	3.45V
MAX767SCAP	0°C to +70°C	20 SSOP	±1.8%	3.6V
MAX767TCAP	0°C to +70°C	20 SSOP	±1.2%	3.3V
MAX767C/D	0°C to +70°C	Dice*	–	–

Ordering Information continued at end of data sheet.

** Contact factory for dice specifications.*

Pin Configuration

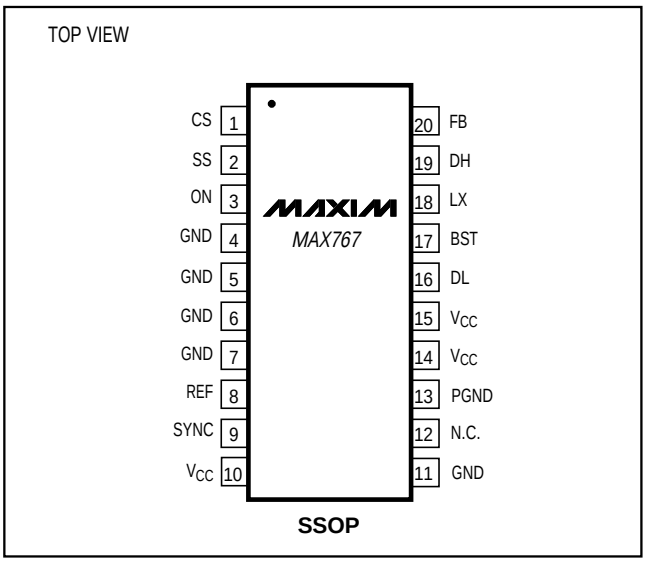

™ Pentium is a trademark of Intel. PowerPC is a trademark of IBM.

Call toll free 1-800-998-8800 for free samples or literature.

5V-to-3.3V, Synchronous, Step-Down Power-Supply Controller

ABSOLUTE MAXIMUM RATINGS

V_{CC} to GND .....-0.3V, +7V
PGND to GND .....±2V
BST to GND .....-0.3V, +15V
LX to BST .....-7V, +0.3V
Inputs/Outputs to GND
(ON, REF, SYNC, CS, FB, SS) .....-0.3V, V_{CC} + 0.3V
DL to PGND .....-0.3V, V_{CC} + 0.3V
DH to LX .....-0.3V, BST + 0.3V
REF Short to GND .....Momentary
REF Current 20mA
Continuous Power Dissipation (T_A = +70°C)
20-Pin SSOP (derate 8.00mW/°C above +70°C) 640mW
Operating Temperature Ranges:
MAX767CAP/MAX767_CAP .....0°C to +70°C
MAX767EAP/MAX767_EAP .....-40°C to +85°C
Lead Temperature (soldering, 10sec) .....+300°C

Stresses beyond those listed under "Absolute Maximum Ratings" may cause permanent damage to the device. These are stress ratings only, and functional operation of the device at these or any other conditions beyond those indicated in the operational sections of the specifications is not implied. Exposure to absolute maximum rating conditions for extended periods may affect device reliability.

ELECTRICAL CHARACTERISTICS

(V_{CC} = ON = 5V, GND = PGND = SYNC = 0V, I_{REF} = 0mA, T_A = T_{MIN} to T_{MAX}, unless otherwise noted. Typical values are at T_A = +25°C.)

PARAMETER	CONDITIONS		MIN	TYP	MAX	UNITS
V_{CC} Input Supply Range			4.5		5.5	V
Output Voltage (FB)	0mV < (CS - FB) < 80mV, 4.5V < V_{CC} < 5.5V (includes load and line regulation)	MAX767, MAX767T	3.17	3.35	3.46	V
		MAX767R	3.32	3.50	3.60	
		MAX767S	3.46	3.65	3.75	
Load Regulation	(CS - FB) = 0mV to 80mV			2.5		%
Line Regulation	V_{CC} = 4.5V to 5.5V			0.1		%
V_{CC} Fault Lockout Voltage	Falling edge, hysteresis = 1%		3.80		4.20	V
Current-Limit Voltage	CS - FB		80	100	120	mV
SS Source Current			2.50	4	6.5	µA
SS Fault Sink Current			2			mA
Reference Voltage (REF)	MAX767, MAX767R, MAX767S		3.24	3.30	3.36	V
	MAX767T		3.26	3.30	3.34	
V_{CC} Standby Current	ON = 0V, V_{CC} = 5.5V			120	200	µA
V_{CC} Quiescent Current	FB = CS = 3.5V			0.7	1.0	mA
Oscillator Frequency	SYNC = 3.3V		260	300	340	kHz
	SYNC = 0V or 5V			200		
Oscillator SYNC Range			240		350	kHz
SYNC High Pulse Width			200			ns
SYNC Low Pulse Width			200			ns
SYNC Rise/Fall Time	Not tested				200	ns
Oscillator Maximum Duty Cycle	SYNC = 3.3V		89	92		%
	SYNC = 0V			95		
Input Low Voltage	SYNC, ON				0.8	V
Input High Voltage	ON		2.40			V
	SYNC		V_{CC} - 0.5			
Input Current	SYNC, ON = 0V or 5V				±1	µA
DL Sink/Source Current	DL = 2V			1		A
DH Sink/Source Current	(BST - LX) = 4.5V, DH = 2V			1		A
DL On Resistance	High or low				7	Ω
DH On Resistance	High or low, (BST - LX) = 4.5V				7	Ω

Typical Operating Characteristics

(Circuit of Figure 1 (5A configuration), V_{IN} = 5V, oscillator frequency = 300kHz, T_A = +25°C, unless otherwise noted.)

EFFICIENCY vs. OUTPUT CURRENT (1.5A CIRCUIT)

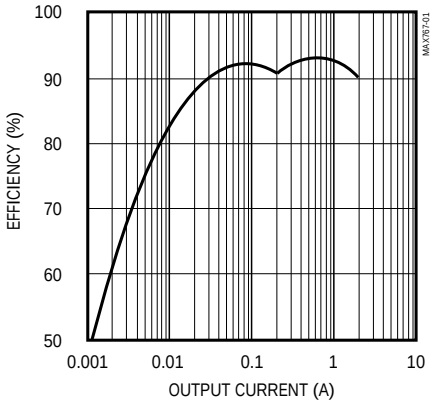

EFFICIENCY vs. OUTPUT CURRENT (3A CIRCUIT)

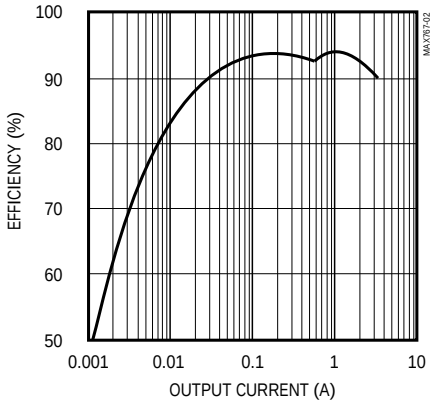

EFFICIENCY vs. OUTPUT CURRENT (5A CIRCUIT)

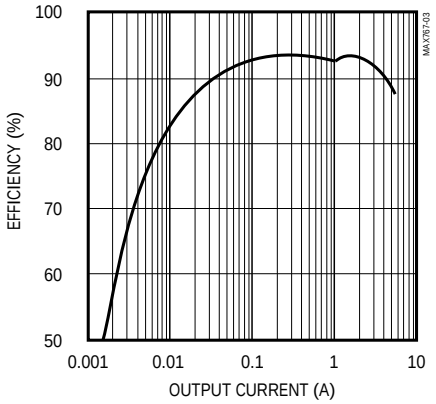

EFFICIENCY vs. OUTPUT CURRENT (7A CIRCUIT)

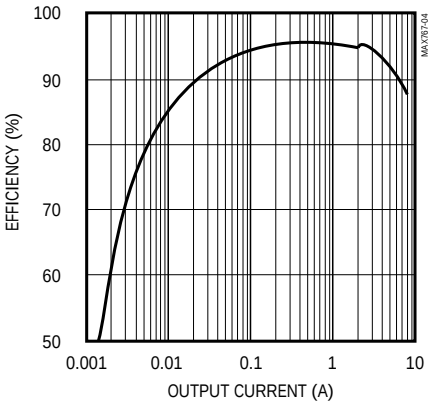

EFFICIENCY vs. OUTPUT CURRENT (10A CIRCUIT)

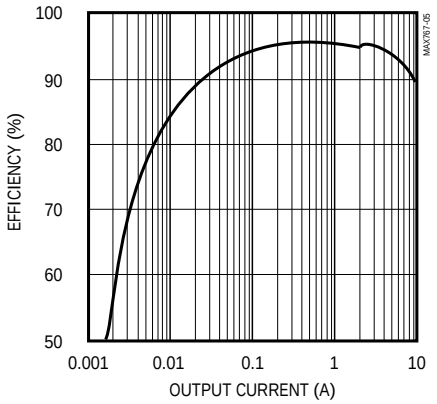

SWITCHING FREQUENCY vs. PERCENT OF FULL LOAD

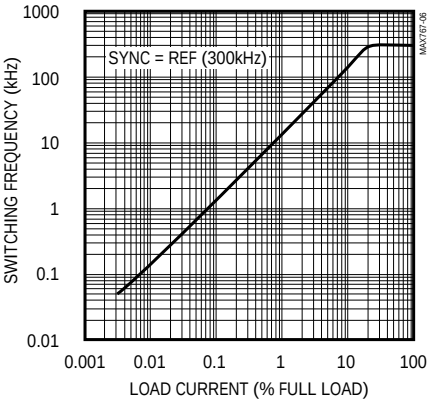

IDLE-MODE WAVEFORMS

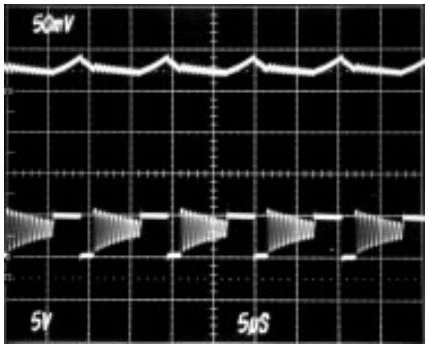

3.3V OUTPUT
50mV/div, AC COUPLED

LX
5V/div

5µs/div

I_{LOAD} = 300mA

PWM-MODE WAVEFORMS

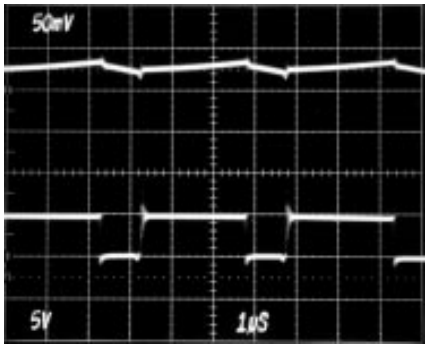

3.3V OUTPUT
50mV/div, AC COUPLED

LX
5V/div

1µs/div

I_{LOAD} = 5A

5V-to-3.3V, Synchronous, Step-Down Power-Supply Controller

Typical Operating Characteristics (continued)

(Circuit of Figure 1 (5A configuration), V_{IN} = 5V, oscillator frequency = 300kHz, T_A = +25°C, unless otherwise noted.)

1.5A CIRCUIT LOAD-TRANSIENT RESPONSE

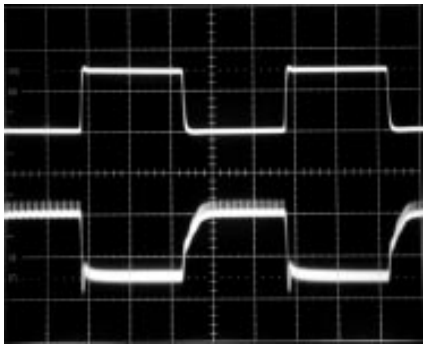

3A CIRCUIT LOAD-TRANSIENT RESPONSE

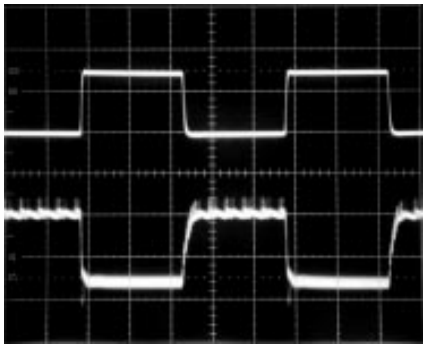

5A CIRCUIT LOAD-TRANSIENT RESPONSE

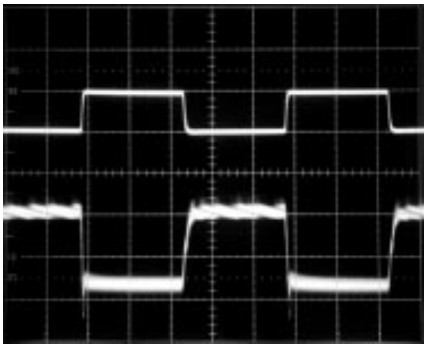

7A CIRCUIT LOAD-TRANSIENT RESPONSE

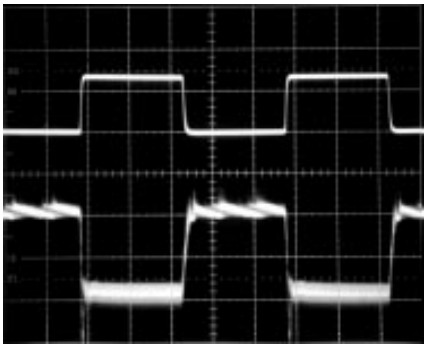

10A CIRCUIT LOAD-TRANSIENT RESPONSE

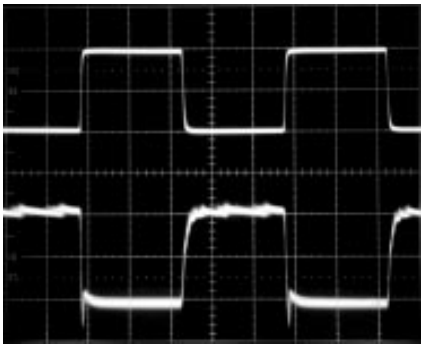

Pin Description

PIN	NAME	FUNCTION
1	CS	Current-sense input: +100mV = nominal current-limit level referred to FB.
2	SS	Soft-start input. Ramp time to full current limit is 1ms/nF of capacitance to GND.
3	ON	ON/$\overline{OFF}$ control input to disable the PWM. Tie directly to V_{CC} for automatic start-up.
4–7, 11	GND	Low-current analog ground. Feedback reference point for the output.
8	REF	3.3V internal reference output. Bypass to GND with 0.22µF minimum capacitor.
9	SYNC	Oscillator control/synchronization input. Connect to V_{CC} or GND for 200kHz; connect to REF for 300kHz. For external clock synchronization in the 240kHz to 350kHz range, a high-to-low transition causes a new cycle to start.
10, 14, 15	V_{CC}	Supply voltage input: 4.5V to 5.5V
12	N.C.	No internal connection
13	PGND	Power ground
16	DL	Gate-drive output for the low-side synchronous rectifier MOSFET
17	BST	Boost capacitor connection (0.1µF)
18	LX	Inductor connection. Can swing 2V below GND without latchup.
19	DH	Gate-drive output for the high-side MOSFET
20	FB	Feedback and current-sense input for the PWM

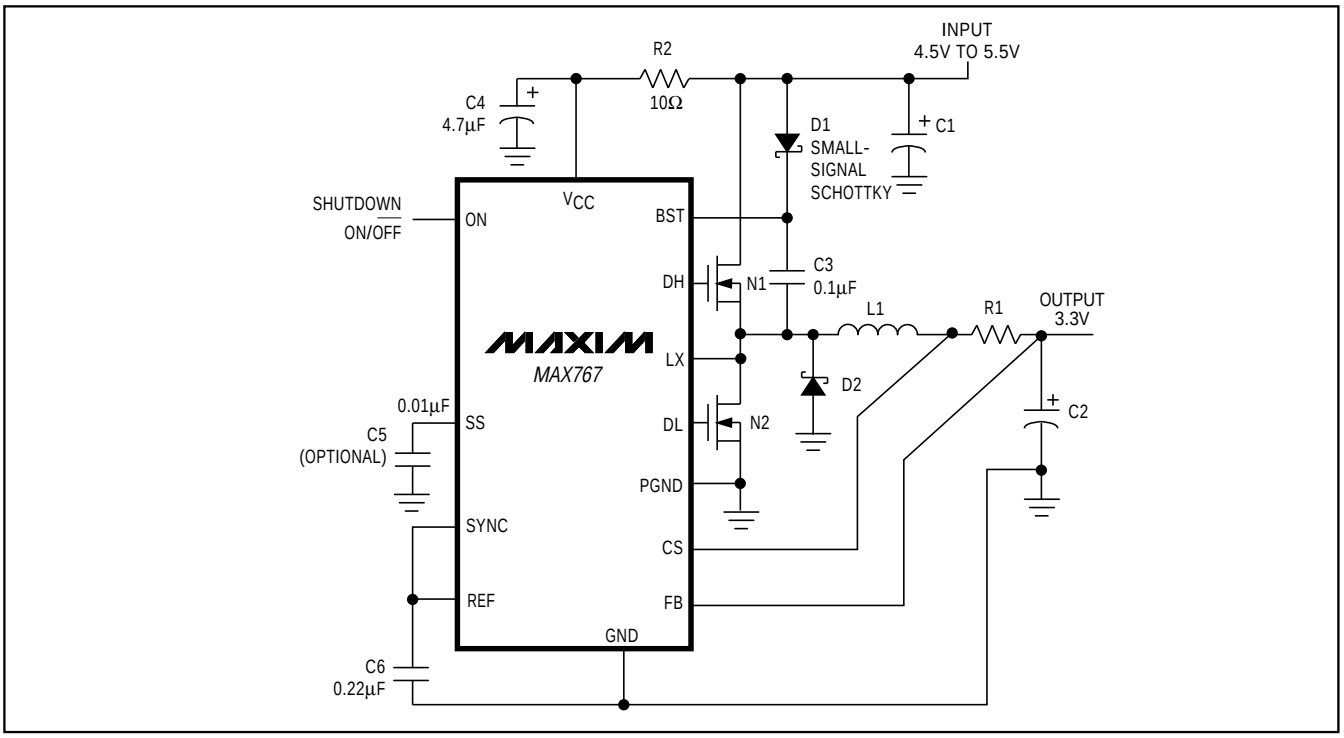

Figure 1. Standard Application Circuit

5V-to-3.3V, Synchronous, Step-Down Power-Supply Controller

Standard Application Circuits

This data sheet shows five predesigned circuits with output current capabilities from 1.5A to 10A. Many users will find one of these standard circuits appropriate for their needs. If a standard circuit is used, the remainder of this data sheet (*Detailed Description* and *Applications Information and Design Procedure*) can be bypassed.

Figure 1 shows the Standard Application Circuit. Table 1 gives component values and part numbers for five different implementations of this circuit: 1.5A, 3A, 5A, 7A, and 10A output currents.

Each of these circuits is designed to deliver the full rated output load current over the temperature range listed. In addition, each will withstand a short circuit of several seconds duration from the output to ground. If the circuit must withstand a continuous short circuit, refer to the *Short-Circuit Duration* section for the required changes.

Layout and Grounding

Good layout is necessary to achieve the designed output power, high efficiency, and low noise. Good layout includes the use of a ground plane, appropriate component placement, and correct routing of traces using appropriate trace widths. The following points are in order of decreasing importance.

1. A ground plane is essential for optimum performance. In most applications, the circuit will be located on a multilayer board and full use of the four or more copper layers is recommended. Use the top and bottom layers for interconnections and the inner layers for an uninterrupted ground plane.
2. Because the sense resistance values are similar to a few centimeters of narrow traces on a printed circuit board, trace resistance can contribute significant errors. To prevent this, Kelvin connect CS and FB to the sense resistor; i.e., use separate traces not carrying any of the inductor or load current, as shown in Figure 2. These signals must be carefully shielded from DH, DL, BST, and the LX node. Important: place the sense resistor as close as possible to and no further than 10mm from the MAX767.
3. Place the LX node components N1, N2, L1, and D2 as close together as possible. This reduces resistive and switching losses and confines noise due to ground inductance.
4. The input filter capacitor C1 should be less than 10mm away from N1's drain. The connecting copper trace carries large currents and must be at least 2mm wide, preferably 5mm.
5. Keep the gate connections to the MOSFETs short for low inductance (less than 20mm long and more than 0.5mm wide) to ensure clean switching.
6. To achieve good shielding, it is best to keep all switching signals (MOSFET gate drives DH and DL, BST, and the LX node) on one side of the board and all sensitive nodes (CS, FB, and REF) on the other side.
7. Connect the GND and PGND pins directly to the ground plane, which should ideally be an inner layer of a multilayer board.

Detailed Description

Note: *The remainder of this document contains the detailed information necessary to design a circuit that differs substantially from the five standard application circuits. If you are using one of the predesigned standard circuits, the following sections are provided only for your reading pleasure.*

The MAX767 converts a 4.5V to 5.5V input to a 3.3V output. Its load capability depends on external components and can exceed 10A. The 3.3V output is generated by a current-mode, pulse-width-modulation (PWM) step-down regulator. The PWM regulator operates at either 200kHz or 300kHz, with a corresponding tradeoff between somewhat higher efficiency (200kHz) and smaller external component size (300kHz). The MAX767 also has a 3.3V, 5mA reference voltage. Fault-protection circuitry shuts off the output should the reference lose regulation or the input voltage go below 4V (nominally).

External components for the MAX767 include two N-channel MOSFETs, a rectifier, and an LC output filter. The gate-drive signal for the high-side MOSFET, which must exceed the input voltage, is provided by a boost circuit that uses a 0.1µF capacitor. The synchronous rectifier keeps efficiency high by clamping the voltage across the rectifier diode. An external low-value current-sense resistor sets the maximum current limit, preventing excessive inductor current during start-up or under short-circuit conditions. An optional external capacitor sets the programmable soft-start, reducing in-rush surge currents upon start-up and providing adjustable power-up time.

The PWM regulator is a direct-summing type, lacking a traditional integrator-type error amplifier and the phase shift associated with it. It therefore does not require external feedback-compensation components, as long as you follow the ESR guidelines in the *Applications Information and Design Procedure* sections.

Table 1. Component Values

Part	1.5A Circuit	3A Circuit	5A Circuit	7A Circuit	10A Circuit
L1	10µH Sumida CDR74B-100	5µH Sumida CDR125 DRG# 4722-JPS-001	3.3µH CoilCraft DO3316-332	2.1µH, 5mΩ Coiltronics CTX03-12338-1	1.5µH, 3.5mΩ Coiltronics CTX03-12357-1
R1	0.04Ω IRC LR2010-01-R040 or DD WSL-2512-R040	0.02Ω IRC LR2010-01-R020 or DD WSL-2512-R020	0.012Ω DD WSL-2512-R012 or 2 x 0.025Ω IRC LR2010-01-R025 (in parallel)	3 x 0.025Ω IRC LR2010-01-R025 or DD WSL-2512-R025 (in parallel)	3 x 0.020Ω IRC LR2010-01-R020 or 2 x 0.012Ω DD WSL-2512-R012 (in parallel)
N1, N2	International Rectifier IRF7101, Siliconix Si9936DY or Motorola MMDF3N03HD (dual N-channel)	Siliconix Si9410DY, International Rectifier IRF7101 or Motorola MMDF3N03HD (both FETs in parallel)	Motorola MTD20N03HDL	Motorola MTD75N03HDL (N1) MTD20N03HDL (N2)	Motorola MTD75N03HDL
C1	47µF, 20V AVX TPSD476K020R	2 x 47µF, 20V AVX TPSD476K020R	220µF, 10V Sanyo OS-CON 10SA220M	2 x 100µF, 10V Sanyo OS-CON 10SA100M	2 x 220µF, 10V Sanyo OS-CON 10SA220M
C2	220µF, 6.3V Sprague 595D227X06R3D2B	2 x 150µF, 10V Sprague 595D157X0010D7T	2 x 220µF, 10V Sanyo OS-CON 10SA220M	2 x 220µF, 10V Sanyo OS-CON 10SA220M	4 x 220µF, 10V Sanyo OS-CON 10SA220M
D2	1N5817 Nihon EC10QS02, or Motorola MBRS120T3	1N5817 Nihon EC10QS02, or Motorola MBRS120T3	1N5820 Nihon NSQ03A02, or Motorola MBRS340T3	1N5820 Nihon NSQ03A02, or Motorola MBRS340T3	1N5820 Nihon NSQ03A02, or Motorola MBRS340T3
Temp. Range	to +85°C	to +85°C	to +85°C	to +85°C	to +85°C

Table 2. Component Suppliers

Company	Factory Fax [Country Code]	USA Telephone
AVX	[1] (207) 283-1941	(800) 282-4975
CoilCraft	[1] (708) 639-1469	(708) 639-6400
Coiltronics	[1] (407) 241-9339	(407) 241-7876
DD	[1] (402) 563-6418	(402) 563-6582
IRC	[1] (512) 992-3377	(512) 992-7900
International Rectifier	[1] (310) 322-3332	(310) 322-3331
Motorola	[1] (602) 244 4015	(602) 244- 3576
Nihon	[81] 3-3494-7414	(805) 867-2555
Sanyo	[81] 7-2070-1174	(619) 661-6835
Siliconix	[1] (408) 970-3950	(408) 988-8000
Sprague	[1] (603) 224-1430	(603) 224-1961
Sumida	[81] 3-3607-5144	(708) 956-0666

5V-to-3.3V, Synchronous, Step-Down Power-Supply Controller

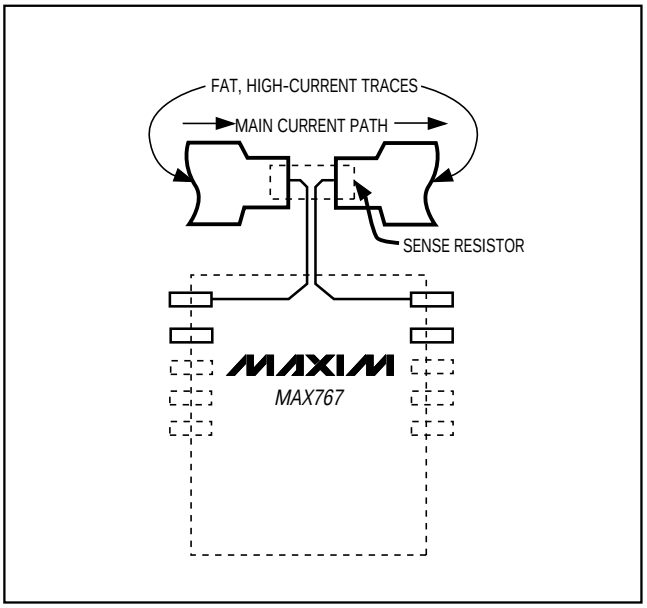

Figure 2. Kelvin Connections for the Current-Sense Resistor

The main gain block is an open-loop comparator that sums four signals: output voltage error signal, current-sense signal, slope-compensation ramp, and the 3.3V reference. This direct-summing method approaches the ideal of cycle-by-cycle control of the output voltage. Under heavy loads, the controller operates in full PWM mode. Every pulse from the oscillator sets the output latch and turns on the high-side switch for a period determined by the duty factor (approximately V_{OUT} / V_{IN}).

As the high-side switch turns off, the synchronous rectifier latch is set; 60ns later, the low-side switch turns on. The low-side switch stays on until the beginning of the next clock cycle (in continuous-conduction mode) or until the inductor current reaches zero (in discontinuous-conduction mode). Under fault conditions where the inductor current exceeds the 100mV current-limit threshold, the high-side latch resets and the high-side switch turns off.

At light loads, the inductor current fails to exceed the 25mV threshold set by the minimum-current comparator. When this occurs, the PWM goes into Idle-Mode™, skipping most of the oscillator pulses to reduce the switching frequency and cut back switching losses. The oscillator is effectively gated off at light loads because the minimum-current comparator immediately resets the high-side latch at the beginning of each cycle, unless the FB signal falls below the reference voltage level.

Soft-Start

Connecting a capacitor from the soft-start pin (SS) to ground allows a gradual build-up of the 3.3V output after power is applied or ON is driven high. When ON is low, the soft-start capacitor is discharged to GND. When ON is driven high, a 4µA constant current source charges the capacitor up to 4V. The resulting ramp voltage on SS linearly increases the current-limit comparator set-point, increasing the duty cycle to the external power MOSFETs. With no soft-start capacitor, the full output current is available within 10µs (see *Applications Information and Design Procedure* section).

Synchronous Rectifier

Synchronous rectification allows for high efficiency by reducing the losses associated with the Schottky rectifier. Also, the synchronous-rectifier MOSFET is necessary for correct operation of the MAX767's boost gate-drive supply.

When the external power MOSFET (N1) turns off, energy stored in the inductor causes its terminal voltage to reverse instantly. Current flows in the loop formed by the inductor (L1), Schottky diode (D2), and the load—an action that charges up the output filter capacitor (C2). The Schottky diode has a forward voltage of about 0.5V which, although small, represents a significant power loss and degrades efficiency. The synchronous-rectifier MOSFET parallels the diode and is turned on by DL shortly after the diode conducts. Since the synchronous rectifier's on resistance ($r_{DS(ON)}$) is very low, the losses are reduced. The synchronous-rectifier MOSFET is turned off when the inductor current falls to zero.

The MAX767's internal break-before-make timing ensures that shoot-through (both external switches turned on at the same time) does not occur. The Schottky rectifier conducts during the time that neither MOSFET is on, which improves efficiency by preventing the synchronous-rectifier MOSFET's lossy body diode from conducting.

The synchronous rectifier works under all operating conditions, including discontinuous-conduction mode and idle-mode.

™ Idle-Mode is a trademark of Maxim Integrated Products.

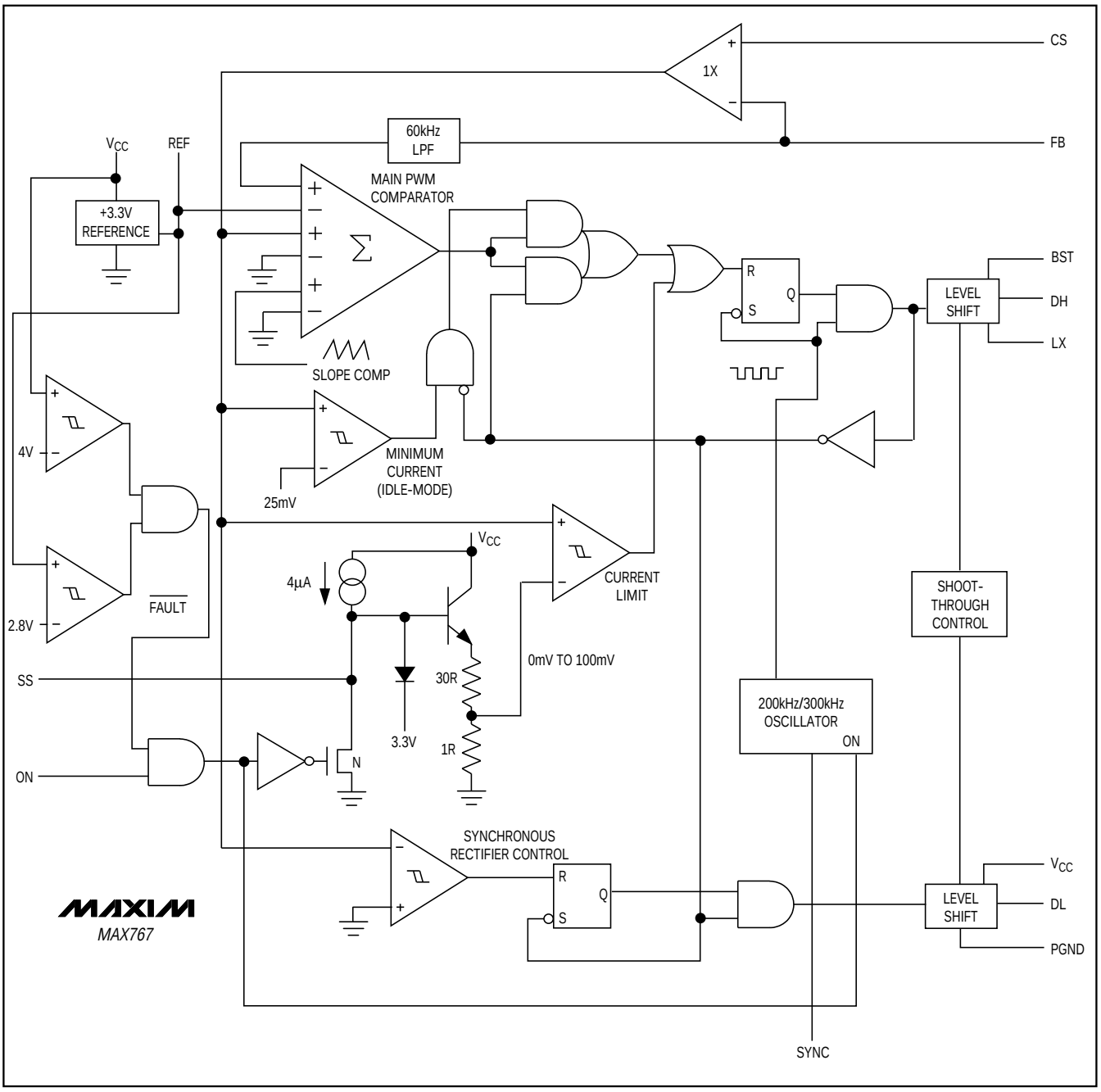

Figure 3. MAX767 Block Diagram

5V-to-3.3V, Synchronous, Step-Down Power-Supply Controller

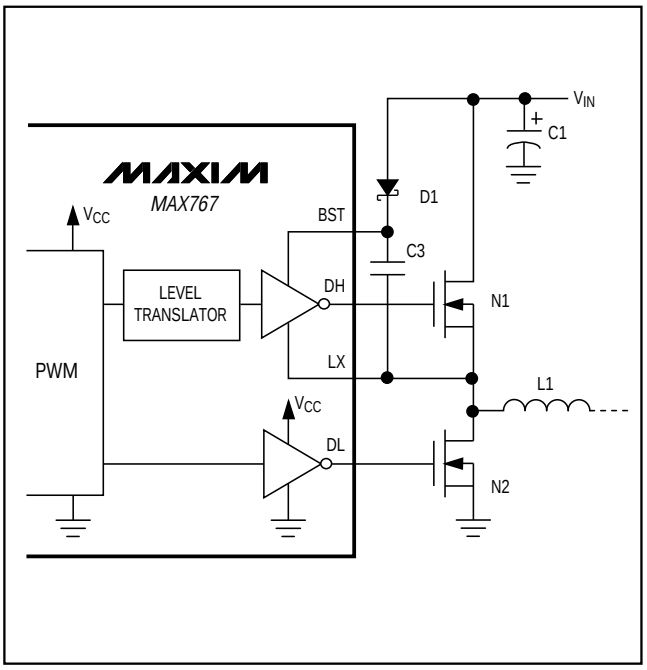

Figure 4. Boost Supply for High-Side Gate Driver

Gate-Driver Boost Supply

Gate-drive voltage for the high-side N-channel switch is generated with the flying-capacitor boost circuit shown in Figure 4. The capacitor (C3) is alternately charged from the 5V input via the diode (D1) and placed in parallel with the high-side MOSFET's gate-source terminals. On start-up, the synchronous rectifier (low-side) MOSFET (N2) forces LX to 0V and charges the BST capacitor to 5V. On the second half-cycle, the PWM turns on the high-side MOSFET (N1); it does this by closing an internal switch between BST and DH, which connects the capacitor to the MOSFET gate. This provides the necessary enhancement voltage to turn on the high-side switch, an action that "boosts" the 5V gate-drive signal above the input voltage.

Ringing seen at the high-side MOSFET gates (DH) in discontinuous-conduction mode (light loads) is a natural operating condition. It is caused by the residual energy in the tank circuit, formed by the inductor and stray capacitance at the LX node. The gate-driver negative rail is referred to LX, so any ringing there is directly coupled to the gate-drive supply.

Modes of Operation

PWM Mode

Under heavy loads—over approximately 25% of full load—the supply operates as a continuous-current PWM supply (see *Typical Operating Characteristics*). The duty cycle, %ON, is approximately:

$$\%ON = \frac{V_{OUT}}{V_{IN}}$$

Current flows continuously in the inductor: first, it ramps up when the power MOSFET conducts; second, it ramps down during the flyback portion of each cycle as energy is put into the inductor and then discharged into the load. Note that the current flowing into the inductor when it is being charged is also flowing into the load, so the load is continuously receiving current from the inductor. This minimizes output ripple and maximizes inductor use, allowing very small physical and electrical sizes. Output ripple is primarily a function of the filter capacitor's effective series resistance (ESR), and is typically under 50mV (see *Design Procedure* section).

Idle-Mode

Under light loads (<25% of full load), the MAX767 enhances efficiency by turning the drive voltage on and off for only a single clock period, skipping most of the clock pulses entirely. Asynchronous switching, seen as "ghosting" on an oscilloscope, is thus a normal operating condition whenever the load current is less than approximately 25% of full load.

At certain input voltage and load conditions, a transition region exists where the controller can pass back and forth from idle-mode to PWM mode. In this situation, short pulse bursts occur, which make the current waveform look erratic but do not materially affect the output ripple. Efficiency remains high.

Current Limiting

The voltage between CS and FB is continuously monitored. An external, low-value shunt resistor is connected between these pins, in series with the inductor, allowing the inductor current to be continuously measured throughout the switching cycle. Whenever this voltage exceeds 100mV, the drive voltage to the external high-side MOSFET is cut off. This protects the MOSFET, the load, and the input supply in case of short circuits or temporary load surges. The current-limiting resistance is typically 20mΩ for 3A.

Oscillator Frequency

The SYNC input controls the oscillator frequency. Connecting SYNC to GND or to V_{CC} selects 200kHz operation; connecting it to REF selects 300kHz operation. SYNC can also be driven with an external 240kHz to 350kHz CMOS/TTL source to synchronize the internal oscillator. Normally, 300kHz operation is chosen to minimize the inductor and output filter capacitor sizes, but 200kHz operation may be chosen for a small (about 1%) increase in efficiency at heavy loads.

Internal Reference

The internal 3.3V bandgap reference (REF) remains active, even when the switching regulator is turned off. It can furnish up to 5mA, and can be used to supply memory keep-alive power or for other purposes. Bypass REF to GND with 0.22µF, plus 1µF/mA of load current.

Applications Information and Design Procedure

Most users will be able to work with one of the standard application circuits; others may want to implement a circuit with an output current rating that lies between or beyond the standard values.

If you want an output current level that lies between two of the standard application circuits, you can interpolate many of the component values from the values given for the two circuits. These components include the input and output filter capacitors, the inductor, and the sense resistor. The capacitors must meet ESR and ripple current requirements (see *Input Filter Capacitor* and *Output Filter Capacitor* sections). The inductor must meet the required current rating (see *Inductor* section).

You may use the rectifier and MOSFETs specified for the circuit with the greater output current capability, or choose a new rectifier and MOSFETs according to the requirements detailed in the *Rectifier* and *MOSFET Switches* sections. For more complete information, or for output currents in excess of 10A, refer to the design information in the following sections.

Inductor, L1

Three inductor parameters are required: the inductance value (L), the peak inductor current (I_{LPEAK}), and the coil resistance (R_L). The inductance is:

$$L1 = \frac{1.32}{f \times I_{OUT} \times LIR}$$

where:

f = switching frequency, normally 300kHz

I_{OUT} = maximum 3.3V DC load current (A)

LIR = ratio of inductor peak-to-peak AC current to average DC load current, typically 0.3.

A higher LIR value allows smaller inductance, but results in higher losses and ripple.

The highest peak inductor current (I_{LPEAK}) equals the DC load current (I_{OUT}) plus half the peak-to-peak AC inductor current (I_{LPP}). The peak-to-peak AC inductor current is typically chosen as 30% of the maximum DC load current, so the peak inductor current is 1.15 x I_{OUT}.

The peak inductor current at any load is given by:

$$I_{LPEAK} = I_{OUT} + \frac{1.32}{2 \times f \times L1}$$

The coil resistance should be as low as possible, preferably in the low milliohms. The coil is effectively in series with the load at all times, so the wire losses alone are approximately:

$$\text{Power Loss} = I_{OUT}^2 \times R_L$$

In general, select a standard inductor that meets the L, I_{LPEAK}, and R_L requirements. If a standard inductor is unavailable, choose a core with an LI^2 parameter greater than L x I_{LPEAK}^2, and use the largest wire that will fit the core.

Current-Sense Resistor, R1

The current-sense resistor must carry the peak current in the inductor, which exceeds the full DC load current. The internal current limiting starts when the voltage across the sense resistors exceeds 100mV nominally, 80mV minimum. Use the minimum value to ensure adequate output current capability: R1 = 80mV / I_{LPEAK}.

The low V_{IN}/V_{OUT} ratio creates a potential problem with start-up under full load or with load transients from no-load to full load. If the supply is subjected to these conditions, reduce the sense resistor:

$$R1 = \frac{70mV}{I_{LPEAK}}$$

Since the sense-resistance values are similar to a few centimeters of narrow traces on a printed circuit board, trace resistance can contribute significant errors. To prevent this, Kelvin connect the CS and FB pins to the sense resistors; i.e., use separate traces not carrying any of the inductor or load current, as shown in Figure 2.

5V-to-3.3V, Synchronous, Step-Down Power-Supply Controller

Place R1 as close as possible to the MAX767, preferably less than 10mm. Run the traces at minimum spacing from one another. If they are longer than 20mm, bypass CS to FB with a 1nF capacitor placed as close as possible to these pins. The wiring layout for these traces is critical for stable, low-ripple outputs (see *Layout and Grounding* section).

Input Filter Capacitor, C1

Use at least 6µF per watt of output power for C1. If the 5V input is some distance away or comes through a PC bus, greater capacitance may be desirable to improve the load-transient response. Use a low-ESR capacitor located no further than 10mm from the MOSFET switch (N1) to prevent ringing. The ripple current rating must be at least $I_{RMS} = 0.5 \times I_{OUT}$. For high-current applications, two or more capacitors in parallel may be needed to meet these requirements.

The ESR of C1 is effectively in series with the input. The resistive dissipation of C1, $I_{RMS}^2 \times ESR_{C1}$, can significantly impact the circuit's efficiency.

Output Filter Capacitor, C2

The output filter capacitor determines the loop stability, output voltage ripple, and output load-transient response.

Stability

To ensure stability, stay above the minimum capacitance value and below the maximum ESR value. These values are:

$$C2 > \frac{3\Omega}{R1}\ \mu F$$

and

$$ESR_{C2} < R1$$

Be sure to satisfy both these requirements. To achieve the low ESR required, it may be appropriate to parallel two or more capacitors and/or use a total capacitance 2 or 3 times larger than the calculated minimum.

Output Ripple

The output ripple in continuous-conduction mode is:

$$V_{OUT(RPL)} = I_{OUT}(max) \times LIR \times \left(ESR_{C2} + \frac{1}{2 \times \pi \times f \times C2}\right)$$

where f is the switching frequency (200kHz or 300kHz).

In idle-mode, the ripple has a capacitive and a resistive component:

.

$$V_{OUT(RPL)}(C) = \frac{0.0004 \times L}{R1^2 \times C2} \times 0.89\ \text{Volts}$$

$$V_{OUT(RPL)}(R) = \frac{0.02 \times ESR_{C2}}{R1}$$

The total ripple, $V_{OUT(RPL)}$, can be approximated as follows:

if

$$V_{OUT(RPL)}(R) < 0.5\ V_{OUT(RPL)}(C)$$

then

$$V_{OUT(RPL)} = V_{OUT(RPL)}(C)$$

otherwise

$$V_{OUT(RPL)} = 0.5\ V_{OUT(RPL)}(C) + V_{OUT(RPL)}(R)$$

Load-Transient Performance

In response to a large step increase in load current, the output voltage will sag for several microseconds unless C2 is increased beyond the values that satisfy the above requirements. Note that an increase in capacitance is all that's required to improve the transient response, and that the ESR requirements don't change. Therefore, the added capacitance can be supplied by an additional low-cost bulk capacitor in parallel with the normal low-ESR switching-regulator capacitor. The equation for voltage sag under a step load change is:

$$V_{SAG} = \frac{I_{STEP}^2 \times L}{2 \times C2 \times (V_{IN}(min) \times DMAX - 3.3V)}$$

where DMAX is the maximum duty cycle. Higher duty cycles are possible when the oscillator frequency is reduced to 200kHz, since fixed propagation delays through the PWM comparator become a lesser part of the whole period. The tested worst-case limit for DMAX is 92% at 200kHz or 89% at 300kHz. Lower inductance values can reduce the filter capacitance requirement, but only at the expense of increased output ripple (due to higher peak currents).

RC Filter for V_{CC}

R2 and C4 form a lowpass filter to remove switching noise from the V_{CC} input to the MAX767. C4 must have fairly low ESR (<5Ω). Switching noise can interfere with proper output voltage regulation, resulting in an excessive output voltage decrease (>100mV) at full load.

Overheating during soldering can damage the surface-mount capacitors specified for C4, causing the regulation problems described above. Take care to heat the capacitor for as short a time as possible, especially if it is soldered by hand.

Rectifier, D2

Use a 1N5817 or similar Schottky diode for applications up to 3A, or a 1N5820 for up to 10A. Surface-mount equivalents are available from N.I.E.C. with part numbers EC10QS02 and NSQ03A02, or from Motorola with part numbers MBRS120T3 and MBRS320T3. D2 must be a Schottky diode to prevent the lossy MOSFET body diode from turning on.

Soft-Start

A capacitor connected from GND to SS causes the supply's current-limit level to ramp up slowly. The ramp time to full current limit is approximately 1ms for every nF of capacitance on SS, with a minimum value of 10µs. Typical values for the soft-start capacitor are in the 10nF to 100nF range; a 5V rating is sufficient.

The time required for the output voltage to ramp up to its rated value depends upon the output load, and is not necessarily the same as the time it takes for the current limit to reach full capacity.

Duty Cycle

The duty cycle for the high-side MOSFET (N1) in continuous-conduction mode is:

$$\frac{100\% \times (V_{OUT} + V_{N2})}{V_{IN} - V_{N1}}$$

where:

V_{OUT} = 3.3V

V_{IN} = 5V

V_{N1} and V_{N2} = $I_{LOAD} \times r_{DS(ON)}$ for each MOSFET.

It is apparent that, in continuous-conduction mode, N1 will conduct for about twice the time as N2. Under short-circuit conditions, however, N2 can conduct as much 90% of the time. If there is a significant chance of short circuiting the output, select N2 to handle the resulting duty cycle (see *Short-Circuit Duration* section).

MOSFET Switches, N1 and N2

The two N-channel MOSFETs must be "logic-level" FETs; that is, they must be fully on (have low $r_{DS(ON)}$) with only 4V gate-source drive voltage. For high-current applications, FETs with low gate-threshold voltage specifications (i.e., maximum $V_{GS(TH)}$ = 2V rather than 3V) are preferred. In addition, they should have low total gate charge (<70nC) to minimize switching losses.

For output currents in excess of the five standard application circuits, placing MOSFETs with very low gate charge in parallel increases output current and lowers resistive losses. N2 does not normally require the same current capacity as N1 because it conducts only about 33% of the time, while N1 conducts about 66% of the time.

Short-Circuit Duration

At their highest rated temperatures (+70°C or +85°C), each of the five standard application circuits will withstand a short circuit of several seconds duration. In most cases, the MAX767 will be used in applications where long-term short circuiting of the output is unlikely.

If it is desirable for the circuit to withstand a continuous short circuit, the MOSFETs must be able to dissipate the required power. This depends on physical factors such as the mounting of the transistor, any heat-sinking used, and ventilation provided, as well as the actual current the transistor must deliver. The short-circuit current is approximately 100mV / R1, but may vary by ±20%.

Cautious design requires that the transistors withstand the maximum possible current, which is I_{SC} = 120mV / R1. N1 and N2 must withstand this current scaled by their maximum duty factors. The maximum duty factor for N1 occurs under high-load (but not short-circuit) conditions, and is approximately V_{OUT} / V_{IN}(min) or about 0.7. The maximum duty factor for N2 occurs during short-circuit conditions and is:

$$1 - \frac{I_{SC} \times r_{DS(ON)N2}}{V_{IN}(max) - I_{SC} \times r_{DS(ON)N1}}$$

which can exceed 0.9. The total power dissipated in both MOSFETs together is $I_{SC}^2 \times r_{DS(ON)}$.

5V-to-3.3V, Synchronous, Step-Down Power-Supply Controller

Proper circuit operation requires that the short-circuit current be at least I_{LOAD} x (1 + LIR / 2). However, the standard application circuits are designed for a short-circuit current slightly in excess of this amount. This excess design current guarantees proper start-up under constant full-load conditions and proper full-load transient response, and is particularly necessary with low input voltages. If the circuit will not be subjected to full-load transients or to loads approaching the full-load at start-up, you can decrease the short-circuit current by increasing R1, as described in the *Current-Sense Resistor* section. This may allow use of MOSFETs with a lower current-handling capability.

Heavy-Load Efficiency

Losses due to parasitic resistances in the switches, coil, and sense resistor dominate at high load-current levels. Under heavy loads, the MAX767 operates deep in the continuous-conduction mode, where there is a large DC offset to the inductor current (plus a small sawtooth AC component) (see *Inductor* section). This DC current is exactly equal to the load current, a fact which makes it easy to estimate resistive losses via the simplifying assumption that the total inductor current is equal to this DC offset current. The major loss mechanisms under heavy loads, in usual order of importance, are:

- I^2R losses
- gate-charge losses
- diode-conduction losses
- transition losses
- capacitor-ESR losses
- losses due to the operating supply current of the IC.

Inductor-core losses, which are fairly low at heavy loads because the AC component of the inductor current is small, are not accounted for in this analysis.

$$\text{Efficiency} = \frac{P_{OUT}}{P_{IN}} \times 100\% = \frac{P_{OUT}}{P_{OUT} + PD_{TOTAL}} \times 100\%$$

$$PD_{TOTAL} = PD_{(I^2R)} + PD_{GATE} + PD_{DIODE} + PD_{TRAN} + PD_{CAP} + PD_{IC}$$

I^2R Losses

$$PD_{(I^2R)} = \text{resistive loss} = (I_{LOAD}^2) \times (R_{COIL} + r_{DS(ON)} + R1)$$

where R_{COIL} is the DC resistance of the coil and $r_{DS(ON)}$ is the drain-source on resistance of the MOSFET. Note that the $r_{DS(ON)}$ term assumes that identical MOSFETs are employed for both the synchronous rectifier and high-side switch, because they time-share the inductor current. If the MOSFETs are not identical, estimate losses by averaging the two individual $r_{DS(ON)}$ terms according to their duty factors: 0.66 for N1 and 0.34 for N2.

Gate-Charge Losses

$$PD_{GATE} = \text{gate driver loss} = q_G \times f \times 5V$$

where q_G is the sum of the gate charge for low- and high-side switches. Note that gate-charge losses are dissipated in the IC, not the MOSFETs, and therefore contribute to package temperature rise. For a pair of matched MOSFETs, q_G is simply twice the gate capacitance of a single MOSFET (a data sheet specification).

Diode Conduction Losses

$$PD_{DIODE} = \text{diode conduction losses} = I_{LOAD} \times V_D \times t_D \times f$$

where V_D is the forward voltage of the Schottky diode at the output current, t_D is the diode's conduction time (typically 110ns), and f is the switching frequency.

Transition Losses

$$PD_{TRAN} = \text{transition loss} = \frac{V_{IN}^2 \times C_{RSS} \times I_{LOAD} \times f}{I_{DRIVE}}$$

where C_{RSS} is the reverse transfer capacitance of the high-side MOSFET (a data sheet parameter), f is the switching frequency, and I_{DRIVE} is the peak current available from the high-side gate driver output (approximately 1A).

Additional switching losses are introduced by other sources of stray capacitance at the switching node, including the catch-diode capacitance, coil interwinding capacitance, and low-side switch drain capacitance, and are given as $PD_{SW} = V_{IN}^2 \times C_{STRAY} \times f$, but these are usually negligible compared to C_{RSS} losses. The low-side switch introduces only tiny switching losses, since its drain-source voltage is already low when it turns on.

Capacitor ESR Losses

$$PD_{CAP} = \text{capacitor ESR loss} = I_{RMS}^2 \times ESR$$

where I_{RMS} = RMS AC input current, approximately I_{LOAD} / 2.

Note that losses in the output filter capacitors are small when the circuit is heavily loaded, because the current into the capacitor is not chopped. The output capacitor sees only the small AC sawtooth ripple current. Ensure that the input bypass capacitor has a ripple current rating that exceeds the value of I_{RMS}.

IC Supply-Current Losses

PD_{IC} is the quiescent power dissipation of the IC and is 5V times the quiescent supply current (a data sheet parameter), or about 5mW.

Light-Load Efficiency

Under light loads, the PWM will operate in discontinuous-conduction mode, where the inductor current discharges to zero at some point during each switching cycle. New loss mechanisms, insignificant at heavy loads, begin to become important. The basic difference is that in discontinuous mode, the AC component of the inductor current is large compared to the load current. This increases losses in the core and in the output filter capacitors. Ferrite cores are recommended over powdered-material types for best light-load efficiency.

At light loads, the inductor delivers triangular current pulses rather than the nearly square waves found in continuous-conduction mode. These pulses ramp up to a point set by the idle-mode current comparator, which is internally fixed at approximately 25% of the full-scale current-limit level. This 25% threshold provides an optimum balance between low-current efficiency and output voltage noise (the efficiency curve would actually look better with this threshold set at about 45%, but the output noise would be too high).

Additional Application Circuits

High-Accuracy Power Supplies

The standard application circuit's accuracy is dominated by reference voltage error (±1.8%) and load regulation error (-2.5%). Both of these parameters can be improved as shown in Figures 5 and 6. Both circuits rely on an external integrator amplifier to increase the DC loop gain in order to reduce the load regulation error to 0.1%. Reference error is improved in the first circuit by employing a version of the MAX767 ("T" grade) which has a ±1.2% reference voltage tolerance. Reference error of the second circuit is further improved by substituting a highly accurate external reference chip (MAX872), which contributes ±0.38% total error over temperature.

These two circuits were designed with the latest generation of dynamic-clock µPs in mind, which place great demands on the transient-response performance of the power supply. As the µP clock starts and stops, the load current can change by several amps in less than 100ns. This tremendous $\Delta i/\Delta t$ can cause output voltage overshoot or sag that results in the CPU VCC going out of tolerance unless the power supply is carefully designed and located close to the CPU. These circuits have excellent dynamic response and low ripple, with transient excursions of less than 40mV under zero to full-load step change. In particular, these two circuits support the "VR" (voltage regulator) version of the Intel P54C Pentium™ CPU, which requires that its supply voltage, including noise and transient errors, be within the 3.30V to 3.45V range.

To configure these circuits for a given load current requirement, substitute standard components from Table 1 for the power switching elements (N1, N2, L1, C1, C2) or use the *Design Procedure*. R1 can also be taken from Table 1, but must be adjusted approximately 10% higher in order to maintain the correct current-limit threshold. This increased value is due to the 0.9 gain factor introduced by the H-bridge resistor divider (R3–R6).

If the remote sense line must sense the output voltage on the far side of a connector or jumper that has the possibility of becoming disconnected while the power supply is operating, an additional 10kΩ resistor should connect the sense line to the output voltage in the connector's power-supply side in order to prevent accidental overvoltage at the CPU.

For applications that are powered from a fixed +12V or battery input rather than from +5V, use a MAX797 IC instead of the MAX767. The MAX797 is capable of accepting inputs up to 30V. See the MAX796–MAX799 data sheet for a high-accuracy circuit schematic.

5V-to-3.3V, Synchronous, Step-Down Power-Supply Controller

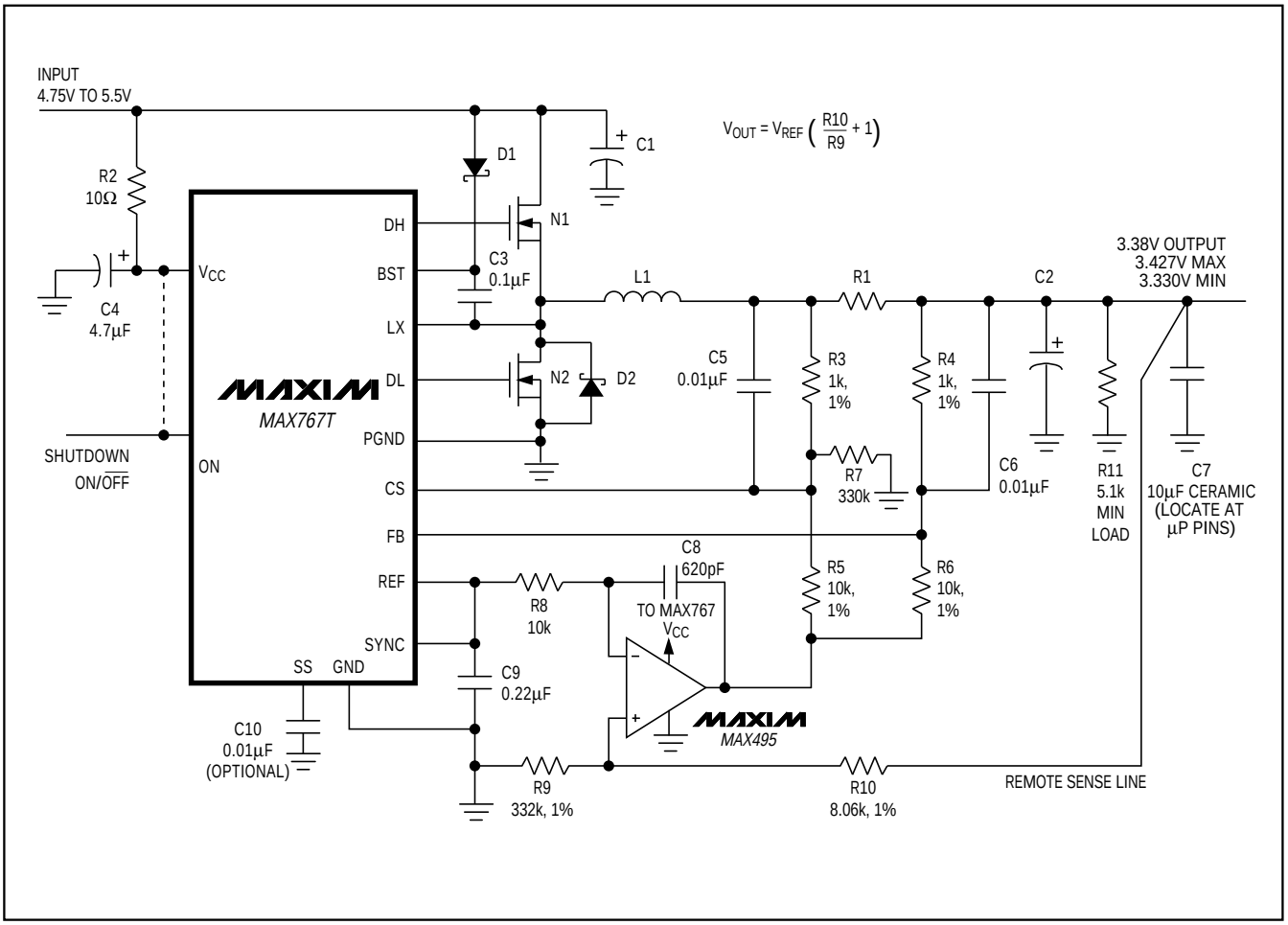

Figure 5. High-Accuracy CPU Power Supply with Internal Reference

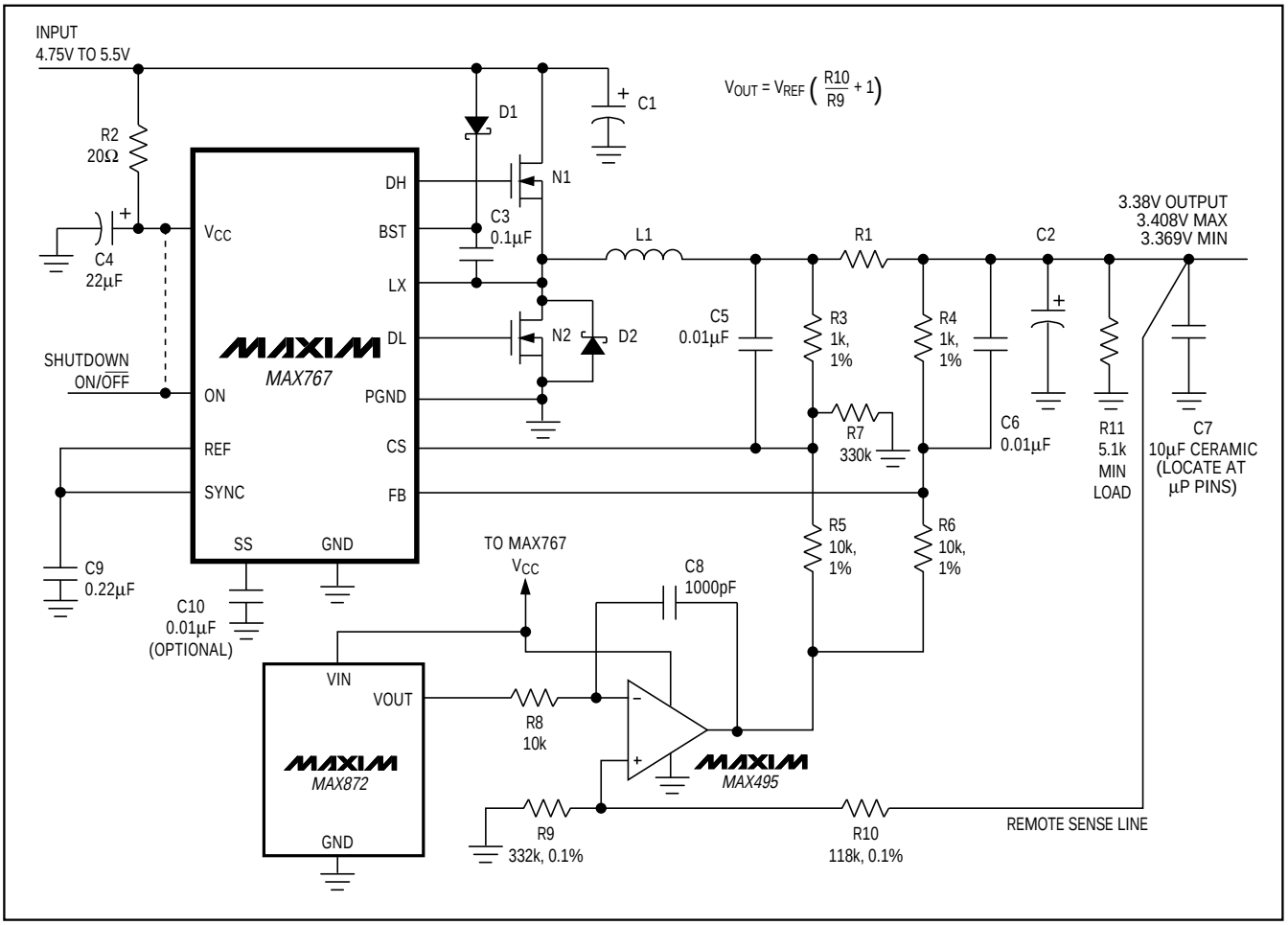

$$V_{OUT} = V_{REF}\left(\frac{R10}{R9} + 1\right)$$

Figure 6. High-Accuracy CPU Power Supply with External Reference

5V-to-3.3V, Synchronous, Step-Down Power-Supply Controller

_Ordering Information (continued)

PART	TEMP. RANGE	PIN-PACKAGE	REF. TOL.	V_{OUT}
MAX767EAP	0°C to +70°C	20 SSOP	±1.8%	3.3V
MAX767REAP	0°C to +70°C	20 SSOP	±1.8%	3.45V
MAX767SEAP	0°C to +70°C	20 SSOP	±1.8%	3.6V
MAX767TEAP	0°C to +70°C	20 SSOP	±1.2%	3.3V

_____Chip Topography

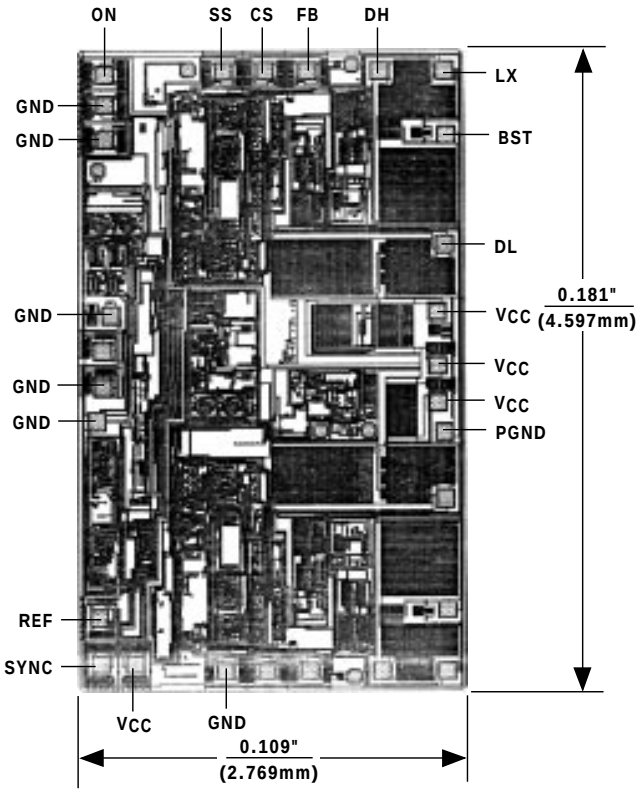

TRANSISTOR COUNT: 1294

SUBSTRATE CONNECTED TO GND

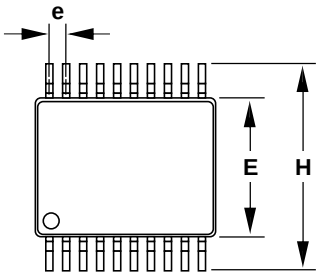

DIM	INCHES		MILLIMETERS	
	MIN	MAX	MIN	MAX
A	0.068	0.078	1.73	1.99
A1	0.002	0.008	0.05	0.21
B	0.010	0.015	0.25	0.38
C	0.005	0.009	0.13	0.22
D	0.278	0.289	7.07	7.33
E	0.205	0.212	5.20	5.38
e	0.0256 BSC		0.65 BSC	
H	0.301	0.311	7.65	7.90
L	0.022	0.037	0.55	0.95
α	0°	8°	0°	8°

21-0003A

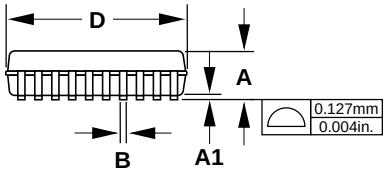

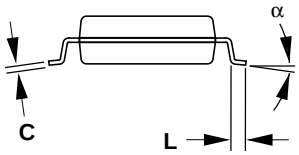

20-PIN PLASTIC SHRINK SMALL-OUTLINE PACKAGE